Metrology for Manufacturing Means Business

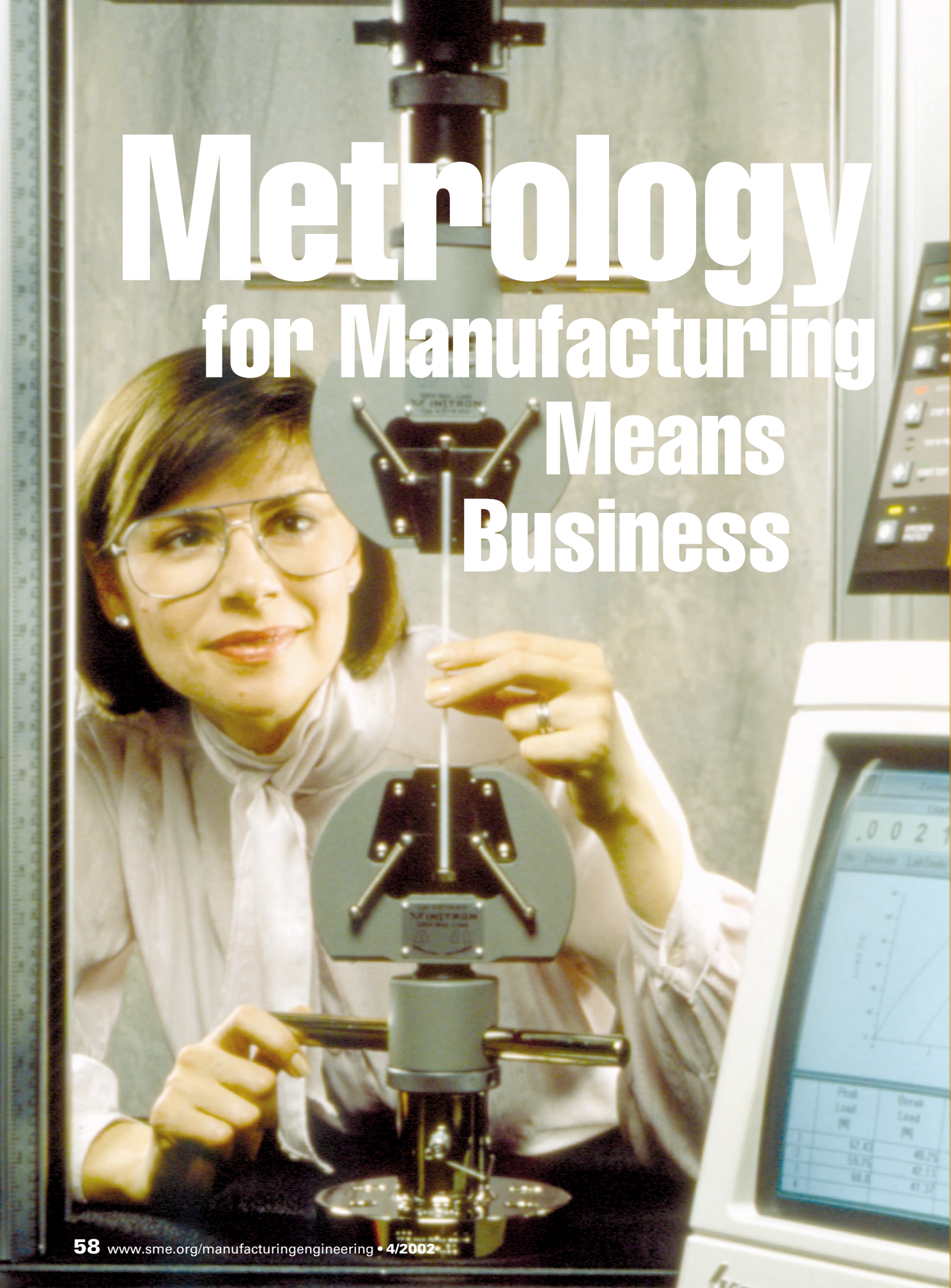

There are some heavy hitters on this team: DaimlerChrysler, Ford, Honeywell, Boeing, GE Aircraft, and the Naval Surface Warfare Center, to name but a few. And the engineers making up this team are assembling under the aegis of the Automotive Industry Action Group (AIAG, Southfield, MI) to tackle a multimillion-dollar problem that is not solely an automotive industry concern: passing metrology data seamlessly through manufacturing applications. In other words, a common format for metrology.

Conceptualizing, writing, and obtaining consensus on industry standards is laborious, time-intensive, and extremely difficult to do, yet the potential benefits justify the effort. At issue is the more than $1 billion spent annually in the automotive industry alone due to non-conformance in the automotive supply chain. Where metrology is concerned, Robert D. Waite, manager of vehicle engineering operations in the Advanced Metrology Group at DaimlerChrysler (Auburn Hills, MI) describes the inability to exchange a common inspection model directly to downstream activities as the largest redundancy in the metrology process. "Typically, metrology data must be manually re-entered into simulation tools or a coordinate measuring machine's operating software," he says. "CMM programmers re-create inspection programs using ambiguous measurement practices at each stage of the product-development cycle. And inspection programs created for System A are not portable to System B. Each program provides a slightly different answer for the engineer, who then wonders which answer is correct."

Standards currently on the books are insufficient concerning interoperability. The Dimensional Measurement Interface Standard (DMIS) has been an ANSI (American National Standards Institute) standard since 1990 and still does not provide the portability to move inspection programs between many metrology systems. STEP interfaces (the Standard for the Exchange of Product Model Data) have been under development for six years, and STEP protocols for metrology may not be available for years. "To keep interoperability issues at a minimum, technology should be developed to standards, not standards to technology", states Glen Allan, Supervisor of Quality Control at Ford's New Model Program Development Center (Dearborn, MI). However, technology has grown at a much faster pace than standards development. "It is hard to achieve closure if you develop standards to technology because technology moves too fast. This creates a condition that breeds the development of proprietary systems that require specialized programming - such as translator development - in order to transfer data from one system to another. Thus, there are increased costs associated with the development and maintenance of these interfaces that affect every aspect of data transfer, from CAD through final report. This is all because we, as a metrology society, do not demand and faithfully participate in a timely resolve to the creation of standards".

Raymond E. Chalmers
Senior Editor

So the Metrology Interoperability Project Team's goal is to catch up and reduce product development cycle time and associated manufacturing costs through achieving true interoperability of metrology software and hardware components. Organized under the AIAG's Collaborative Engineering and Process Development Steering Committee, the team, which includes metrology software and equipment manufacturers, sees itself providing a single "voice of the user" in specifying interoperability requirements. Activities within scope of this group include:

- Identifying gaps in current standards.
- Performing in-depth evaluation of current and developing standards for a particular interface to determine which to support.
- Identify and assist in harmonizing competing or overlapping standards.
- Developing and performing conformance and interoperability tests.
- Writing specifications for interfaces where no satisfactory non-proprietary standard exists.
- Obtaining consensus user requirements to provide as input to standards-developing organizations.

Why is all this so important? Basically, because dimensional metrology data is intimately tied to a company's product quality and performance assessment efforts. Metrology data has to be shared easily with production scheduling, design, purchasing, and many other manufacturing company functions. Ideally, a manufacturer should be able to acquire and store many types of dimensional inspection data and have each type of data be in the same format regardless of the type of equipment used to acquire it.

For example, there are numerous types of devices for taking measurements: hand-held electronic calipers and micrometers, various types of probes used on CNC machining centers (touch probes, noncontact probes, surface roughness sensors), photogrammetry equipment, and CMMs. Among CMMs, there are choices: traditional fixed-

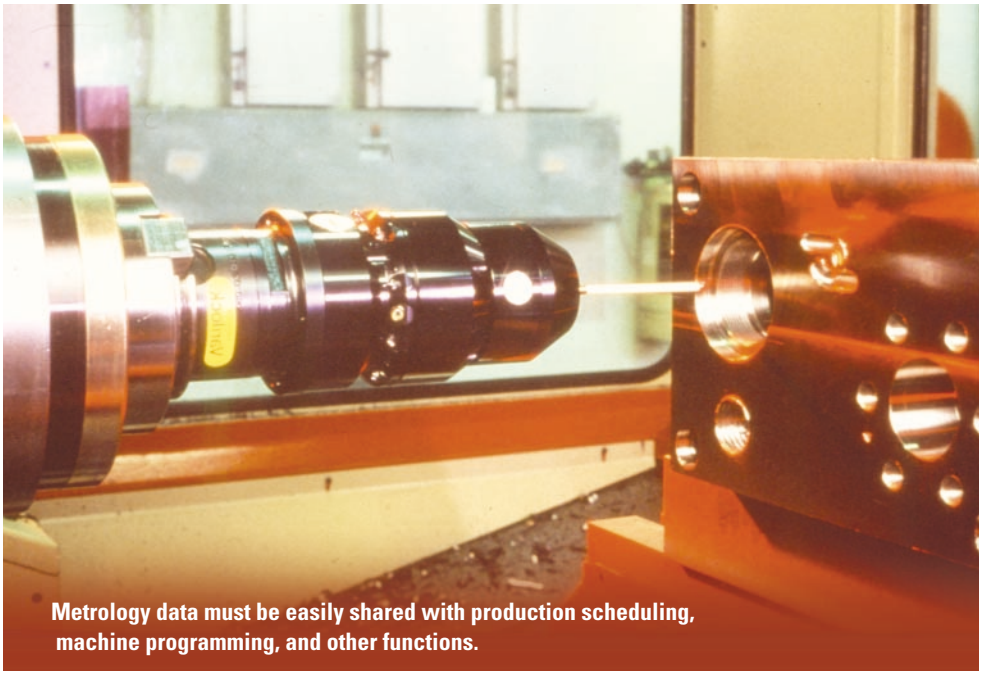

Metrology data must be easily shared with production scheduling, machine programming, and other functions.

position machines, portable models with articulated arms, and laser trackers.

And as there are different means of acquiring metrology data, there are different activities that the data affect. The Manufacturing Engineering Laboratory at the National Institute of Standards and Testing (NIST), also heavily involved in the AIAG Metrology Interoperability Project Team, identifies 15 such activities that interface either with machine or user requirements: activity coordination, CAD, solids modeling, hand-held device measuring, executing high-level inspection instructions (such as running a DMIS program), executing low-level inspection instructions (such as CMM driver commands), inspection planning, inspection programming, machining planning, machining programming, math computing, controlling other inspection devices, executing probe instructions, routing planning, and reporting and analysis.

Team members have developed a flow chart identifying these 15 activities and the producer and user interfaces between them. Activity coordination (planning and scheduling activities and assigning resources to them) is at the center of the chart as a user of 10 other metrology activities. CAD, for example (which includes dimensional and tolerance data to drive a product's design as well as downstream metrology activities) is a producer of dimensional metrology data that interfaces with such activities as machine programming, routing planning, and inspection programming, among others. All such "modules" need clear, unambiguous flow of metrology data.

Those activities needing immediate attention for this task are what the team calls "hot interfaces." Probably the hottest has to do with design: from CAD programs to the inspection planning activity. "This interface is a Tower of Babel," says NIST researcher Albert Wavering. "The current situation is bad, but has persisted for so long and has received so little attention that people are used to it. STEP is making some headway, but the situation needs improvement."

Another hot interface is the one between inspection programming and inspection program execution. Here also there are numerous commercial proprietary languages. And activities within the inspection program execution system include interfaces between executing low-level inspection tasks like "get search distance" or "probe a point," and executing high-level instructions such as "measure a feature" or "run a program." This interface is the focus of no less than three separate standardization efforts: the European I++ effort, the DmeEquip module of DMIS Part 2, and the CMM Driver specification. "It would be very unfortunate to have multiple standards for low-level inspection instructions," says Wavering, who calls harmonizing these efforts a high priority of the interoperability team. "This work should continue until a single format standard is established."

Work on standardizing measurement data itself is just beginning. The bulk of measurement data is point data, supplied largely by a part's CAD model. The Reporting and Analysis activity, however, often needs other data, such as nominal point and feature data that it cannot get from the CAD model, but can obtain from CMMs and other devices.

Choice of programming language for a data standard or application programming interface (API) makes a great difference in how clearly such a standard or API can be stated, implemented, and understood. A language can specify information content or also provide for modeling that content. Languages that separate the two have an advantage over languages that do both. For one, software tools for working with languages that separate content from representation are widely available. Given a specific information model, such programs can produce source code automatically for dealing with data corresponding to the model.

Standardizing CAD data also is of high priority. Many of the data interfaces in Figure 1 require a CAD data format, and there are many model formats from which to choose. Some CAD systems require modeled objects to be physically reasonable, requiring, for example, modeling the entire surface. Others specialize in surface representation and model only a portion of the surface, leaving the rest undefined. In still others, the external file representation is a list of modeling commands that must be rerun by the system to create a working representation of the object modeled. These are nearly impossible to translate from one system to another, although the STEP organization has a Parametrics Committee working on a standard for representing modeling history.

What about STEP, you might ask? STEP AP 203, Configuration Controlled Design, is a non-proprietary CAD data format that provides a boundary representation for design of solid objects. Designed specifically to help solve the problem of data exchange between multiple, non-standard CAD data formats, AP 203 is an ISO international standard and is supported by all major CAD vendors. The problem is AP 203 does not include tolerances, making it unusable for transmitting design information from CAD to most inspection activities, and is weak at best for transmitting design information to manufacturing activities. Certain systems exist that allow a user to start with an AP 203 design and add tolerances to it, but the output file from such a system is not an AP 203 file. The most straightforward way to get a standard for CAD data usable for dimensional metrology purposes is to revise STEP AP 203 to include tolerances.

Completing the effectiveness of the existing standard, DMIS, also is a high priority. Technically, DMIS is a high-level language for controlling dimensional measuring equipment, and includes an input and an output language. Part of the DMIS input language defines features, tolerances, sensors, and other objects. Output language serves both as a log of action commands and settings and a report of results, with actual and nominal point data, features, and tolerances.

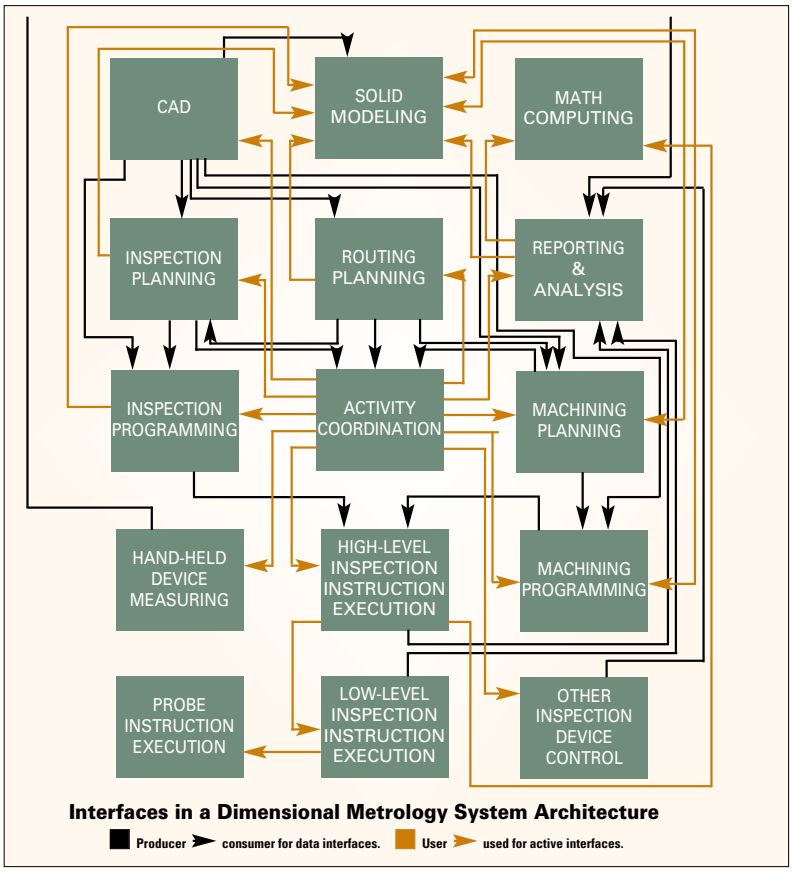

Figure 1—Data Interfaces.

Additional support will only make DMIS stronger. Specfically, it needs fixed conformance classes, not just user-defined conformance, with a set of conformance tests for each class. An independent testing and certification service would be useful in determining a broad set of conformance classes that would function as common knowledge among frequent DMIS users as to which class is required to do which type of job.

Overall, the Metrology Interoperability Project Team sees the following points as the industry's most pressing needs:

- Continue harmonization efforts on DMIS. DMIS is at the key interface between programming and execution for users of dimensional measuring equipment, and particularly needs fixed conformance classes, independent conformance testing, and independent conformance certification.
- Continue work on the CMM driver specification and harmonize it with European I++ efforts and the DmeEquip portion of DMIS Part 2. A standard specification will be equally useful to builders of

controls for CMMs and other measuring equipment as well as writers of inspection software, as it would replace a number of differing APIs with a single interface.

- Work toward a standard 3-D shape representation that includes tolerances. STEP AP 203, which uses boundary representation geometry, is adequate for nominal shapes, but it needs to include tolerances.
- Work toward a standard representation for measurement data that serves as input for reporting and analysis. The bulk of such data so far is point data, but other data such as features are also required.
- To the extent it is possible, the metrology community should work to avoid creating or endorsing multiple standards for the same purpose. Where standards overlap, they should be harmonized to the extent that there is a one-to-one mapping from one standard to the other.
- When defining standards, metrology professionals should move toward methods that separate the file or exchange specification from the information content. A single information model should suffice for many different file formats or database-access methods.

For more information on joining the Metrology Interoperability Consortium, please contact Akram Yunas, program manager at the Automotive Industry Action Group, 26200 Lahser Road, Suite 200, Southfield, MI 48034-2621, (248) 358-3570, or e-mail ayunas@aiag.org.■